My name is _____
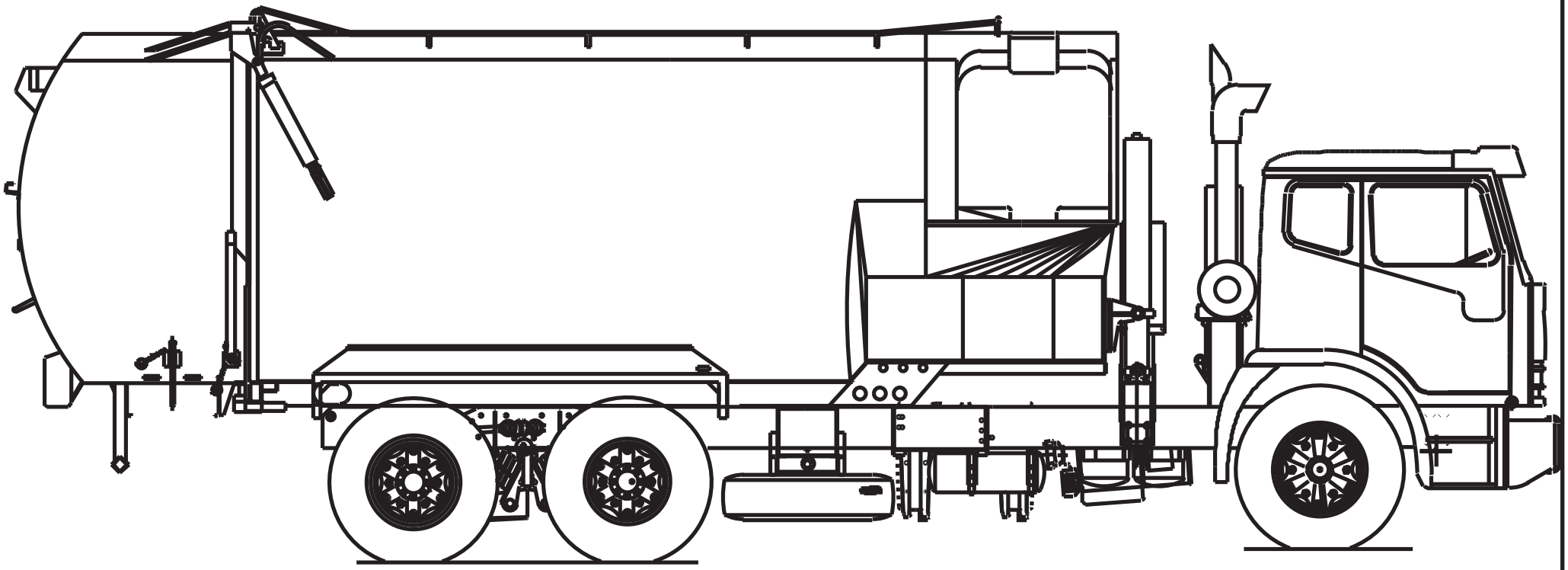
Solo Resource Recovery